Work Order ID 72852

Tuesday, August 16, 2011 11:57:28 AM

Item ID: D2161-212
Revision ID:
Item Name: Mirror Bracket, 212
Start Date: 8/16/2011 **Start Qty:** 2.00
Required Date: 8/30/2011 **Req'd Qty:** 2.00
Reference:

Accept

Setup Start
Stop

Cust Item ID:
Customer:

Run Start
Stop

Approvals: **Process Plan:** MWF **Date:** 11-08-17 **Tooling:** _____ **Date:** _____
QC: _____ **Date:** _____ **SPC (Y/N):** _____ **Date:** _____

Draw Nbr	Revision Nbr
D2161	Rev B2

Sequence ID/ Work Center ID	Operation Description	Set Up/ Run Hours	Tool ID	Tool #	Plan Code	Accept Qty	Reject Qty	Reject Number	Insp. Stamp
100	Weld per dwg A/R S.S. rod Batch: M118367	0.00							
Large Fab	Large Fab					x6	11-12-20	JBL	
Large Fab	**Memo**	0.00							
Large Fab	1-Assemble on Jig DT8065 as per Dwg D2161 2-Weld as per Dwg D2161 Identify as D2161-212								
110	QC9- Inspect visual per QSI004- Fusion Welds	0.00							
QC			CPC 11.12.20			x6	Ø		
Quality Control	**Memo**	0.00							
120	QC5- Inspect part completeness to step on W/O	0.00							
QC			SWM 7/20			(x6)			
Quality Control	**Memo**	0.00							

Dart Aerospace Ltd

W/O:		WORK ORDER CHANGES					
DATE	STEP	PROCEDURE CHANGE	By	Date	Qty	Approval Chief Eng / Prod Mgr	Approval QC Inspector

Part No: _____ **PAR #:** _____ **Fault Category:** _____ **NCR:** Yes No **DQA:** _____ **Date:** _____

Resolution: _____ **Disposition:** _____ **QA: N/C Closed:** _____ **Date:** _____

NCR:		WORK ORDER NON-CONFORMANCE (NCR)						
DATE	STEP	Description of NC Section A	Corrective Action Section B			Verification Section C	Approval Chief Eng	Approval QC Inspector
			Initial Chief Eng	Action Description Chief Eng	Sign & Date			

NOTE: Date & initial all entries

Work Order ID 72852

Tuesday, August 16, 2011 11:57:28 AM

Item ID: D2161-212 **Accept** **Setup Start**

Revision ID: **Stop**

Item Name: Mirror Bracket, 212

Start Date: 8/16/2011 **Start Qty:** 2.00 **Cust Item ID:**

Required Date: 8/30/2011 **Req'd Qty:** 2.00 **Customer:**

Reference:

Approvals: **Process Plan:** _____ **Date:** _____ **Tooling:** _____ **Date:** _____ **Run Start**

QC: _____ **Date:** _____ **SPC (Y/N):** _____ **Date:** _____ **Stop**

Sequence ID/ Work Center ID	Operation Description	Set Up/ Run Hours	Tool ID	Tool #	Plan Code	Accept Qty	Reject Qty	Reject Number	Insp. Stamp
130	Black Sandtex(Ref:4.3.5.7) per QSI005 4.3	0.00				6	X	Ø	m-f 11/12/21
Powdercoat	**Memo**	0.00							
Powder Coating	START TIME: 2:45 ☐OVEN TEMPERATURE: 320°F ☐FINISH TIME: 3:15								
M 115128									
140	QC3- Inspect Part Finish	0.00				6	BR	11-12-21.	
QC	**Memo**	0.00							
Quality Control									
150	Identify as per dwg & Stock Location:_____	0.00				11/12/23			
Packaging	**Memo**	0.00							
Packaging									

Dart Aerospace Ltd

W/O:		WORK ORDER CHANGES					
DATE	STEP	PROCEDURE CHANGE	By	Date	Qty	Approval Chief Eng / Prod Mgr	Approval QC Inspector

Part No: _____ **PAR #:** _____ **Fault Category:** _____ **NCR:** Yes No **DQA:** _____ **Date:** _____

Resolution: _____ **Disposition:** _____ **QA: N/C Closed:** _____ **Date:** _____

NCR:		WORK ORDER NON-CONFORMANCE (NCR)						
DATE	STEP	Description of NC Section A	Corrective Action Section B			Verification Section C	Approval Chief Eng	Approval QC Inspector
			Initial Chief Eng	Action Description Chief Eng	Sign & Date			

NOTE: Date & initial all entries

H:\fFORMS\Quality Assurance\approved QA\NCRWO RevE

Work Order ID 72852

Tuesday, August 16, 2011 11:57:28 AM

Item ID: D2161-212 **Accept** **Setup Start**

Revision ID:

Item Name: Mirror Bracket, 212 **Stop**

Start Date: 8/16/2011 **Start Qty:** 2.00 **Cust Item ID:**

Required Date: 8/30/2011 **Req'd Qty:** 2.00 **Customer:**

Reference:

Approvals: **Process Plan:** _____ **Date:** _____ **Tooling:** _____ **Date:** _____ **Run Start**

QC: _____ **Date:** _____ **SPC (Y/N):** _____ **Date:** _____ **Stop**

Sequence ID/ Work Center ID	Operation Description	Set Up/ Run Hours	Tool ID	Tool #	Plan Code	Accept Qty	Reject Qty	Reject Number	Insp. Stamp
160	QC21- Final Inspection - Work Order Release	0.00							
QC Quality Control	**Memo**	0.00							

11/12/28

11-12-23
(6)

Dart Aerospace Ltd

W/O:		WORK ORDER CHANGES					
DATE	STEP	PROCEDURE CHANGE	By	Date	Qty	Approval Chief Eng / Prod Mgr	Approval QC Inspector

Part No: _____ **PAR #:** _____ **Fault Category:** _____ **NCR:** Yes No **DQA:** _____ **Date:** _____

Resolution: _____ **Disposition:** _____ **QA: N/C Closed:** _____ **Date:** _____

NCR:		WORK ORDER NON-CONFORMANCE (NCR)						
DATE	STEP	Description of NC Section A	Corrective Action Section B			Verification Section C	Approval Chief Eng	Approval QC Inspector
			Initial Chief Eng	Action Description Chief Eng	Sign & Date			

NOTE: Date & initial all entries

H:\fFORMS\Quality Assurance\approved QA\NCRWO RevE

Picklist Print

Tuesday, August 16, 2011 11:57:25 AM

Work Order ID: 72852

Parent Item: D2161-212

Parent Item Name: Mirror Bracket, 212

Start Date: 8/16/2011 **Required Date:** 8/30/2011

Start Qty: 2.00 **Required Qty:** 2.00

Comments: IPP D□02.04.15□Added dwg Rev.B1 and finish□NG□

Component Item ID/ Item Name	Replacement Item ID	Mfg/ Purch	Bin Item	Primary Location	Last Location	Route Seq ID	Unit of Measure	Qty on Hand	Qty per Kit	Total Qty	Qty Issued	Date Issued	Status
D2013-3 Mirror Bracket LH, 212		Manufactured	No			100	Each	4.0000	1	2			
				74022 X6									
				Location		**Loc Qty**		**Loc Code**					
				WA025		4							
					68663	4							
D2013-4 Mirror Bracket RH, 212		Manufactured	No			100	Each	4.0000	1	2			
				74023 X6									
				Location		**Loc Qty**		**Loc Code**					
				WA		4							
					68664	4							
D2037-101 Arm		Manufactured	No			100	Each	3.0000	1	2			
				Location		**Loc Qty**		**Loc Code**					
				WA		3							
					68665	3							
				73154 X1									
				74021 X5									

11-12-19 JBL

Dart Aerospace Ltd

W/O:		WORK ORDER CHANGES					
DATE	STEP	PROCEDURE CHANGE	By	Date	Qty	Approval Chief Eng / Prod Mgr	Approval QC Inspector

Part No: _____ **PAR #:** _____ **Fault Category:** _____ **NCR:** Yes No **DQA:** _____ **Date:** _____

Resolution: _____ **Disposition:** _____ **QA: N/C Closed:** _____ **Date:** _____

NCR:		WORK ORDER NON-CONFORMANCE (NCR)						
DATE	STEP	Description of NC Section A	Corrective Action Section B			Verification Section C	Approval Chief Eng	Approval QC Inspector
			Initial Chief Eng	Action Description Chief Eng	Sign & Date			

NOTE: Date & initial all entries

H:\fFORMS\Quality Assurance\approved QA\NCRWO RevE

#72852

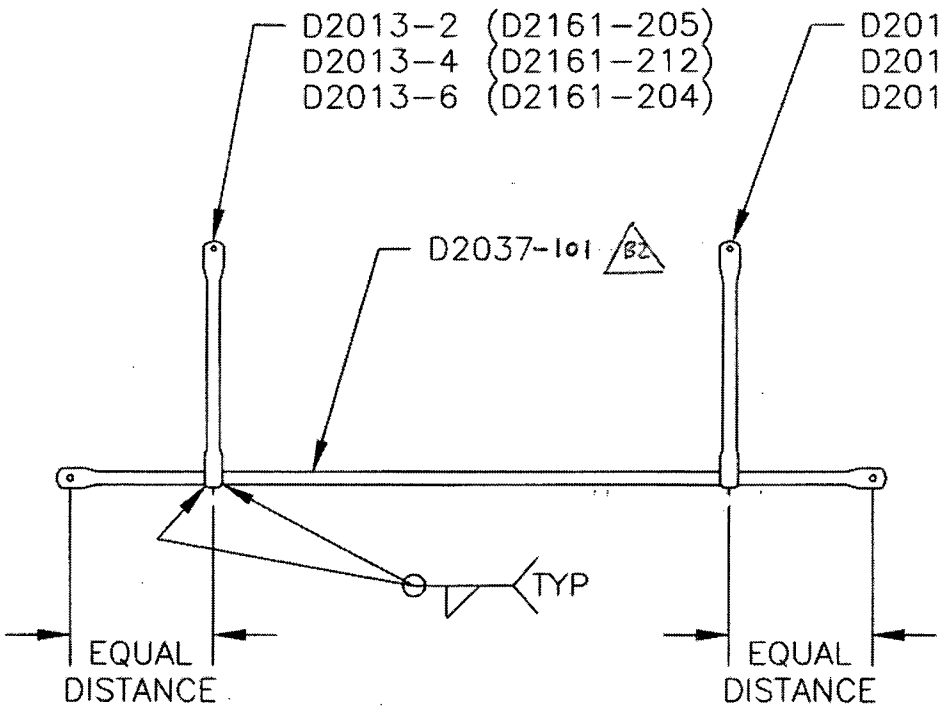

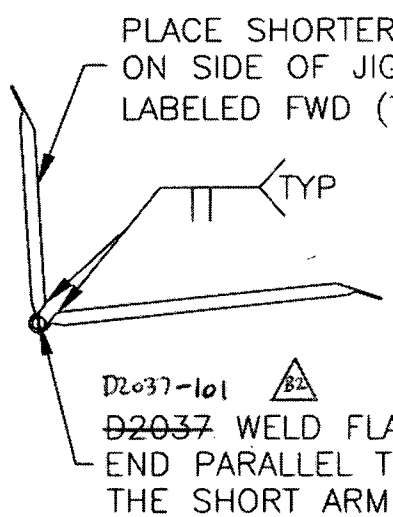

DETAIL OF D2161-204
DETAIL OF D2161-205
DETAIL OF D2161-212

NOTE: WELD ASSEMBLY USING JIG DT8065

FINISH: ~~POWDER COAT ASSEMBLY BLACK CRINKLE (4.3.5.3) PER DART QSI 005 4.3~~
POWDER COAT BLACK SANDTEX (4.3.5.7) PER DART QSI 005 4.3 B1

B1	02.03.25	CHANGE FINISH	
B2	02.06.14	D2037-101 WAS	
B	99.06.07	REDRAWN FOR CLARITY ADDED -204/-205/-212 DESIGNATIONS	
A	93.04.29	NEW ISSUE	

RELEASED KE 99.06.10

DESIGN	DRAWN BY	DART AEROSPACE LTD HAWKESBURY, ONTARIO, CANADA	
JB	RT		
CHECKED	APPROVED	DRAWING NO. D2161	REV. B
DATE 99.06.07		TITLE MIRROR BRACKET	SHEET 1 OF 1
			SCALE NTS

Copyright 1993 by DART AEROSPACE LTD